DH-HAC-HFW1209CL-A-LED

2MP Full-color HDCVI Fixed-focal Bullet Camera

Full-color

* The parameters and datasheets below can only be applied to1209-S3 series.

- 24/7 color imaging, Max. 30 fps@1080p
- Smart Light+.
- 30 m illumination distance
- Super Adapt, 3D NR
- Built-in Mic
- 3.6 mm fixed lens (2.8 mm optional)
- CVI/CVBS/AHD/TVI switchable
- IP67, 12 VDC

Series Overview

The Lite Series is a great choice for consumers looking for high quality monitoring products at a reasonable price. Its low cost and high performance make it ideal for residential areas and SMB solutions. This series is equipped with a wide range of technologies, such as full-color and starlight, providing various solutions for different scenarios.

Functions

Full-color

With its advanced image processing algorithm and capability to absorb large quantities of light, the camera provides 24/7 color monitoring that collects clear and highly detailed information, significantly increasing the reliability of the human and vehicle images that are collected as evidence for intelligent analysis.

Smart Light+

Equipped with advanced LEDs and beam processing technology, the camera effectively reduces interference of stray light, ensuring concentrated illumination within the lens's field of view. This allows the camera to easily produce clear images that reveal the fine details of targets even in low light conditions.

Broadcast-quality Audio

Audio signal transmission over coaxial cables is supported by the HDCVI camera. It adopts a unique audio processing and transmission technology that restores source audio and eliminates noise, ensuring the quality and reliability of the audio information that is collected. This becomes important for video surveillance applications that use audio information as a type of supplementary evidence.

Super Adapt

With its intelligent algorithm, the camera automatically adjusts its parameters to provide optimal performance and vivid images.

Advanced 3DNR

Dahua's advanced 3DNR technology reduces image noise with little to no impact on image sharpness, especially in poor lighting conditions. It detects the noise, and compares the sequential frames to effectively reduce the noise. It also makes efficient use of bandwidth, saving on storage space.

Protection (IP67, Wide Voltage)

IP67: The camera passed a series of rigorous dust and immersion tests. Its enclosure is both dust-proof and waterproof, and can function normally while being immersed in 1 m deep water for up to 30 minutes.

Wide voltage: The camera has ±30% input voltage tolerance (for some power supplies) and a wide voltage range, making it suitable for a variety of outdoor scenarios.

4 Signals over 1 Coaxial Cable

HDCVI technology supports 4 signals (video, audio*, data and power) which are simultaneously transmitted over a coaxial cable. Dual-way data transmission allows the HDCVI camera to interact with the XVR to perform various actions such as sending control signals and triggering alarms. HDCVI technology also supports PoC, which makes the camera easy and quick to install.

* Audio input is available for select HDCVI camera models.

Technical Specification

Camera

Image Sensor	2 MP CMOS
Max. Resolution	1920 (H) × 1080 (V)
Scanning System	Progressive
Electronic Shutter Speed	PAL: 1/25 s–1/100,000 s; NTSC: 1/30 s–1/100,000 s
Min. Illumination	0.001 lux@F1.6 (Color, 30 IRE) 0 lux (Illuminator on)
S/N Ratio	>65 dB
Illumination Distance	30 m (98.43 ft)
Illuminator On/Off Control	Auto;Manual
Illuminator Number	2 (Warm light)
Angle Adjustment	Pan: 0°–360° Tilt: 0°–90° Rotation: 0°–360°

Lens

Lens Type	Fixed-focal
Lens Mount	M12
Focal Length	2.8 mm; 3.6 mm
Max. Aperture	F1.6
Field of View	2.8 mm: H: 107.8°; V: 58.9°; D: 126.8° 3.6 mm: H: 85.9°; V: 46.7°; D: 100.4°
Iris Control	Fixed
Close Focus Distance	2.8 mm: 0.7 m (2.30 ft) 3.6 mm: 1.1 m (3.61 ft)

	Lens	Detect	Observe	Recognize	Identify
DORI Distance	2.8 mm	42.2 m (138.45 ft)	16.9 m (55.45 ft)	8.4 m (27.56 ft)	4.2 m (13.78 ft)
	3.6 mm	53.7 m (176.18 ft)	21.5 m (70.54 ft)	10.7 m (35.10 ft)	5.4 m (17.72 ft)
	*DORI (Detect, Observe, Recognize, Identify) is a standard system (EN-62676-4) for defining the ability of a person viewing the video to distinguish persons or objects within a covered area. The numbers in this table do not reflect intelligent function distances. For intelligent function distances, refer to installation and commissioning manual/project design tool.				

Video

Video Frame Rate	CVI: PAL: 1080p@25 fps; NTSC: 1080p@30 fps; AHD: PAL: 1080p@25 fps; NTSC: 1080p@30 fps; TVI: PAL: 1080p@25 fps; NTSC: 1080p@30 fps; CVBS: PAL: 960H; NTSC: 960H
Resolution	1080p (1920 × 1080); 960H (960 × 576/960 × 480)
Day/Night	Color
BLC	BLC; HLC; DWDR
WDR	DWDR
White Balance	Auto;Area white balance
Gain Control	Manual;Auto
Noise Reduction	3D NR
Illumination Mode	Smart Light
Mirror	Yes
Privacy Masking	Off/On (8 areas, rectangle)
Pick-up Distance	8 m (26.25 ft)

Certification

Certifications	CE-LVD: EN 62368-1; CE-EMC: EN 55032; EN 55035;

Port

Video Output	Video output choices of CVI/TVI/AHD/CVBS by one BNC port
Audio Input	One channel built-in Mic

Power

Power Supply	12 VDC ± 30%
Power Consumption	Max 2.9 W (12 VDC, LED on)

Environment

Operating Temperature	–40 °C to +60 °C (–40 °F to +140 °F)
Operating Humidity	<95% (RH), non-condensing
Storage Temperature	–40 °C to +60 °C (–40 °F to +140 °F)
Storage Humidity	<95% (RH), non-condensing
Protection	IP67
Anti-corrosion Level	Basic Protection

Structure

Casing Material	plastic
Product Dimensions	161.6 mm × 70.0 mm × 69.7 mm (6.36" × 2.76" × 2.74") (L × W × H)
Net Weight	0.17 kg (0.37 lb)
Gross Weight	0.26 kg (0.57 lb)
Installation	Wall mount; ceiling mount; vertical pole mount

Ordering Information

Type	Model	Description
HDCVI CAMERA	DH-HAC-HFW1209CLN-A-LED	2MP Full-color HDCVI Fixed-focal Bullet Camera,NTSC
	DH-HAC-HFW1209CLP-A-LED	2MP Full-color HDCVI Fixed-focal Bullet Camera,PAL

Type	Model	Description
Accessories (Optional)	G3416GW	G3/4" Water Joint
	DH-PFA151	Corner Mount Bracket
	DH-PFA130-E	Water-proof Junction Box
	DH-PFA152-E	Pole Mount Bracket
	DH-PFA134	Junction Box
	DH-PFM800-E	1 Channel Passive HDCVI Balun
	DH-PFM321-EN	DC12V1A power adapter
	DH-PFM320D-EN	DC12V2A power adapter
	PFM904	Integrated Mount Tester

Dimensions (mm[inch])

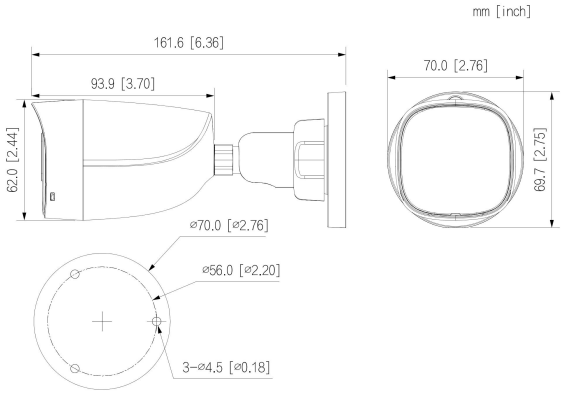

Accessories

Optional:

DH-PFA130-E
Water-proof Junction Box

DH-PFA134
Junction Box

DH-PFA151
Corner Mount Bracket

DH-PFA152-E
Pole Mount Bracket

DH-PFM320D-EN
DC12V2A power adapter

DH-PFM321-EN
DC12V1A power adapter

DH-PFM800-E
1 Channel Passive HDCVI Balun

G3416GW
G3/4" Water Joint

PFM904
Integrated Mount Tester

Ceiling Mount	Junction Mount	Pole Mount(Vertical)
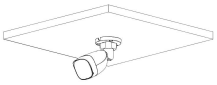	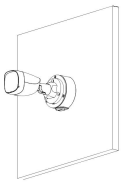	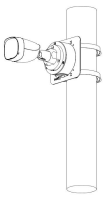

© 2025 Dahua. All rights reserved. Design and specificatons are subject to change without notce.
Pictures in the document are for reference only, and the actual product shall prevail.