IPMECD-0261-M1515-LED

Barrier Rod

- 3 m folding arm (the main pole and auxiliary pole are 1.5m+1.5m) that can be used on either side of the boom gate.
- Made of aluminum alloy, and designed with an anti-rust case that was treated with electrostatic spray.
- The pole has a light strip that can display red and green.
- Elastic anti-smashing rubber strip at the bottom.

Series Overview

Constructed from highly durable aluminum alloy, the Barrier Rod features an advanced anti-rust coating on its surface. Additionally, it is equipped with an elastic anti-collision rubber strip at the bottom for added protection.

Technical Specification

Basic	
Color	Red and white
Matched Product	DHI-IPMECD-2061 Series Barrier
General	
Operating Temperature	–40 °C to +70 °C (–40 °F to +158 °F)
Storage Temperature	–40 °C to +70 °C (–40 °F to +158 °F)
Operating Humidity	10%–90% (RH), non-condensing
Storage Humidity	10%–90% (RH), non-condensing
Casing Material	Metal (Aluminum)
Product Dimensions	3,030.0 mm × 170.0 mm × 45.0 mm (119.29" × 6.69" × 1.77") (L × W × H)
Packaging Dimensions	3,200.0 mm × 210.0 mm × 100.0 mm (126.00" × 8.27" × 3.94") (L × W × H)
Net Weight	7.2 kg (15.87 lb)
Gross Weight	7.7 kg (16.98 lb)
Installation	Compatible with barrier installation
Anti-corrosion Level	Basic Protection

Ordering Information

Type	Model	Description
Barrier Rod	IPMECD-0261-M1515-LED	Barrier Rod
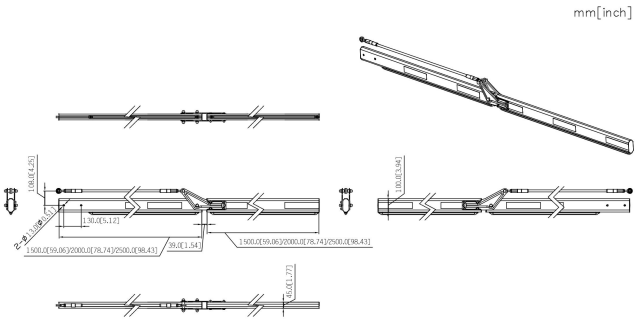
Dimensions (mm[inch])