DH-HAC-T1A51-U-IL

5MP Smart Dual Light HDCVI Fixed-focal Eyeball Camera

* The parameters and datasheets below can only be applied to A51-S3 series.
* In order to use the 5MP 16:9 and the Smart Dual Light HDCVI camera, the firmware of XVR must be upgraded to V4.001.0000004.1.R.220323 or later version.

- Max 25 fps@5MP (16:9 video output)
- Smart Dual Light.
- 25 m illumination distance.
- Quick-to-install eyeball saves installation time.
- 3.6 mm fixed lens (2.8 mm optional).
- CVI/CVBS/AHD/TVI switchable.

Series Overview

The Cooper Series offers simple and highly cost-effective HDCVI solutions. It provides 24/7 reliable monitoring with high-quality image performance, saving cost on both material and labor force. It is also designed and built to the specific standards of Dahua.

Functions

Smart Dual Light

With its smart dual light mechanism, the camera automatically turns on the white light when Perimeter Protection/SMD Plus function of AI XVR detects a target in the rule area to capture clear, vivid images. When the target leaves the rule area, the camera automatically switches over from the white light to the IR light to significantly reduce light pollution.

Easy Installation

HDCVI eyeball comes with a quick-to-install pedestal, which makes it easier to install than conventional eyeballs and reduces cost on time and labor.

4 Signals over 1 Coaxial Cable

HDCVI technology supports 4 signals (video, audio*, data and power) which are simultaneously transmitted over a coaxial cable. Dual-way data transmission allows the HDCVI camera to interact with the XVR to perform various actions such as sending control signals and triggering alarms. HDCVI technology also supports PoC, which makes the camera easy and quick to install.

* Audio input is available for select HDCVI camera models.

Long Distance Transmission

HDCVI technology provides long distance transmission in real time without transmission loss. It supports transmission distances up to 700 m for 2-MP/5-MP/8-MP HD videos through coaxial cables, and up to 300 m through UTP cables. The results were obtained and verified through rigorous testing in Dahua's test laboratory.

Simplicity

HDCVI technology inherits the simplicity of traditional analog surveillance systems, making it a great mechanism for protecting your valuables. HDCVI can be upgraded from the traditional analog system without replacing the existing coaxial cabling. Its plug and play design enables it to produce high-definition videos during surveillance without the hassle of configuring a network.

Multi-language OSD

The OSD offers multiple functions to meet the many requirements of a monitoring scene, such as backlight mode, day/night mode, white balance, privacy mask, and motion detection. 11 languages are available for OSD: Chinese, English, French, German, Spanish, Portuguese, Italian, Japanese, Korean, Russian and Polish.

Technical Specification

Camera

Image Sensor	5 MP CMOS
Max. Resolution	2880 (H) × 1620 (V)
Scanning System	Progressive
Electronic Shutter Speed	PAL: 1/25 s–1/100,000 s NTSC: 1/30 s–1/100,000 s
Min. Illumination	0.02 lux@F2.0 (Color, 30 IRE) 0.002 lux@F2.0 (B/W, 30 IRE) 0 lux (Illuminator on)
S/N Ratio	>65 dB
Illumination Distance	IR: 25 m (82.02 ft) Warm light: 20 m (65.62 ft)
Illuminator On/Off Control	Auto/Manual
Illuminator Number	2 (Multi-core light)
Angle Adjustment	Pan: 0°–360° Tilt: 0°–78° Rotation: 0°–360°

Lens

Lens Type	Fixed-focal
Lens Mount	M12
Focal Length	2.8 mm; 3.6 mm
Max. Aperture	F2.0
Field of View	2.8 mm: H: 105.5°; V: 56.5°; D: 125.3° 3.6 mm: H: 86°; V: 46.1°; D: 104.3°
Close Focus Distance	2.8 mm: 1.0 m (3.28 ft) 3.6 mm: 1.4 m (4.59 ft)

	Lens	Detect	Observe	Recognize	Identify
DORI Distance	2.8 mm	66.0 m (216.54 ft)	26.4 m (86.61 ft)	13.2 m (43.31 ft)	6.6 m (21.65 ft)
	3.6 mm	79.4 m (260.50 ft)	31.8 m (104.33 ft)	15.9 m (52.17 ft)	7.9 m (25.92 ft)
	*DORI (Detect, Observe, Recognize, Identify) is a standard system (EN-62676-4) for defining the ability of a person viewing the video to distinguish persons or objects within a covered area. The numbers in this table do not reflect intelligent function distances. For intelligent function distances, refer to installation and commissioning manual/project design tool.				

Video

Video Frame Rate	CVI: PAL: 5M@25 fps; 5M@12.5 fps; 4M@25 fps; 1080p@25 fps NTSC: 5M@25 fps; 5M@20 fps; 5M@10 fps; 4M@30 fps; 1080p@30 fps AHD: PAL: 4M@25 fps NTSC: 4M@30 fps TVI: PAL: 5M 16:9@20 fps NTSC: 5M 16:9@20 fps CVBS: PAL: 960H NTSC: 960H
Resolution	5M (2880 × 1620); 4M (2560 × 1440); 1080p (1920 × 1080); 960H (960 × 576/960 × 480); TVI 5M 16:9 (2960 × 1665)
Day/Night	Auto(ICR)/Color/B/W
BLC	BLC; HLC; WDR
WDR	DWDR
White Balance	Auto;Area white balance
Gain Control	Auto
Noise Reduction	2D NR
Illumination Mode	Smart IR&WL (CVI, TVI); WL Mode; IR Mode
Mirror	Yes
Privacy Masking	Off/On (8 areas, rectangle)

Certification

Certifications	CE-LVD: EN 62368-1; CE-EMC: EN 55032; EN 55035;

Port

Video Output	Video output choices of CVI/TVI/AHD/CVBS by one BNC port (DIP Switch)

Power

Power Supply	12 VDC (±30%)
Power Consumption	Max 2.5 W (12 VDC, WLED on)

Environment

Operating Temperature	–40 °C to +60 °C (–40 °F to +140 °F)
Operating Humidity	<95% (RH), non-condensing
Storage Temperature	–40 °C to +60 °C (–40 °F to +140 °F)
Storage Humidity	<95% (RH), non-condensing
Anti-corrosion Level	Basic Protection

Structure

Casing Material	Plastic
Product Dimensions	Φ85.0 mm × 77.1 mm (Φ3.35" × 3.04")
Net Weight	0.13 kg (0.29 lb)
Gross Weight	0.19 kg (0.42 lb)
Installation	Wall mount; ceiling mount; vertical pole mount

Ordering Information

Type	Model	Description
HDCVI CAMERA	DH-HAC-T1A51N-U-IL	5MP Smart Dual Light HDCVI Fixed-focal Eyeball Camera,NTSC
	DH-HAC-T1A51P-U-IL	5MP Smart Dual Light HDCVI Fixed-focal Eyeball Camera,PAL

Type	Model	Description
Accessories (Optional)	DH-PFA12C	Plastic Junction Box
	DH-PFM800-4K	1 Channel Passive HDCVI Balun
	DH-PFM321-EN	DC12V1A power adapter
	DH-PFM320D-EN	DC12V2A power adapter
	PFM904	Integrated Mount Tester

Accessories

Optional:

DH-PFA12C
Plastic Junction Box

DH-PFM320D-EN
DC12V2A power adapter

DH-PFM321-EN
DC12V1A power adapter

DH-PFM800-4K
1 Channel Passive HDCVI Balun

PFM904
Integrated Mount Tester

Junction Mount	Wall Mount
	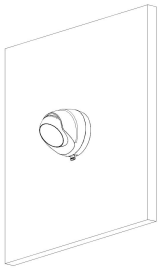

Dimensions (mm[inch])

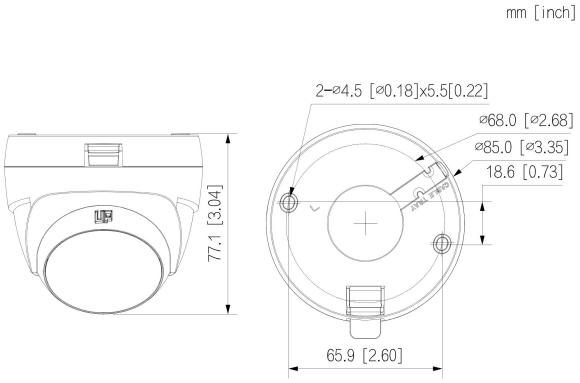

© 2025 Dahua. All rights reserved. Design and specificatons are subject to change without notce.
Pictures in the document are for reference only, and the actual product shall prevail.