DH-IPC-HFW1439TL1-A-IL

4 MP Entry Smart Dual Light Fixed-focal Bullet Network Camera

- 4-MP 1/3" CMOS image sensor, low luminance, and high definition image.
- Outputs max 4 MP (2560 × 1440)@30 fps.
- H.265 codec, high compression rate, ultra-low bit rate.
- Built-in IR LED and warm light, the max IR distance is 50 m and the max warm light distance is 50 m.
- WDR, 3D NR, HLC, BLC, digital watermarking, applicable to various monitoring scenes.
- ROI, Super AI Coding (H.265/H.264), flexible coding, applicable to various bandwidth and storage environments.
- Built-in Mic.
- 12 VDC/PoE power supply, easy for installation.
- IP67 protection.
- SMD Plus.

Series Overview

With features of simple installation, easy operation, and high performance-cost ratio, Dahua Entry series network camera is applicable to small and medium-sized scenes, such as homes/ residences, small-sized retail stores, and other small and medium-sized enterprises.

Functions

Super AI Coding

With advanced AI object detection and scene recognition technology, Super AI Coding integrates ROI, BAE, and DFE to achieve higher encoding efficiency than H.265 and H.264 while effectively reducing storage and transmission costs without compromising video quality.

Smart Dual Light

Dahua Smart Dual Light technology adopts smart algorithm to detect targets. Usually, the IR illuminator is on at night; when the target appears in the monitoring area, the white light is on, and the camera records the full-color video and information of key events. That is, the camera links snapshot and video with full-color image. When the target is out of the monitoring area, the white light is off and the IR illuminator is on, which reduces light pollution efficiently.

SMD Plus

With intelligent algorithm, Dahua Smart Motion Detection technology can categorize the targets that trigger motion detection and filter the motion detection alarm triggered by non-concerned targets to realize effective and accurate alarm.

WDR

With advanced Wide Dynamic Range (WDR) technology, Dahua network camera provides clear details in the environment of strong brightness contrast. The bright and dark area can get clear video even in high brightness environment or with backlight shadow.

Protection (IP67, Wide Voltage)

IP67: The camera passes a series of strict test on dust and soak. It has dust-proof function, and the enclosure can work normally after soaking in 1 m deep water for 30 minutes.

Wide voltage: The camera allows ±30% (for some power supplies) input voltage tolerance (wide voltage range), and it is widely applied to outdoor environment with instable voltage.

Technical Specification

Camera

Image Sensor	1/3" CMOS
Max. Resolution	2560 (H) × 1440 (V)
Scanning System	Progressive
Electronic Shutter Speed	Auto/Manual 1/3 s–1/100,000 s
Min. Illumination	0.006 lux@F1.6 (Color, 30 IRE) 0.0006 lux@F1.6 (B/W, 30 IRE) 0 lux (Illuminator on)
S/N Ratio	>56 dB
Illumination Distance	2.8 mm: Up to 30 m (98.43 ft) (IR) Up to 20 m (65.62 ft) (Warm light) 3.6 mm: Up to 30 m (98.43 ft) (IR) Up to 30 m (98.43 ft) (Warm light) 6 mm: Up to 50 m (164.04 ft) (IR) Up to 50 m (164.04 ft) (Warm light)
Illuminator On/Off Control	Auto;Manual
Illuminator Number	2 (IR LED); 2 (Warm light)
Angle Adjustment	Pan: 0° to 360° Tilt: 0° to 90° Rotation: 0° to 360°

Lens

Lens Type	Fixed-focal
Lens Mount	M12
Focal Length	2.8 mm; 3.6 mm; 6 mm
Max. Aperture	F1.6
Field of View	2.8 mm: H: 95°; V: 53°; D: 110° 3.6 mm: H: 78°; V: 42°; D: 92° 6 mm: H: 49°; V: 26°; D: 57°
Iris Control	Fixed
Close Focus Distance	2.8 mm: 1.0 m (3.28 ft) 3.6 mm: 1.5 m (4.92 ft) 6 mm: 3.2 m (10.50 ft)

	Lens	Detect	Observe	Recognize	Identify
DORI Distance	2.8 mm	61.6 m (202.10 ft)	24.6 m (80.71 ft)	12.3 m (40.35 ft)	6.2 m (20.34 ft)
	3.6 mm	78.0 m (255.91 ft)	31.2 m (102.36 ft)	15.6 m (51.18 ft)	7.8 m (25.59 ft)
	6 mm	124.0 m (406.82 ft)	49.6 m (162.73 ft)	24.8 m (81.36 ft)	12.4 m (40.68 ft)
	*DORI (Detect, Observe, Recognize, Identify) is a standard system (EN-62676-4) for defining the ability of a person viewing the video to distinguish persons or objects within a covered area. The numbers in this table do not reflect intelligent function distances. For intelligent function distances, refer to installation and commissioning manual/project design tool.				

Intelligence

SMD	SMD Plus

Video

Video Compression	H.265; H.264; H.264H; H.264B; MJPEG (Only supported by sub stream)
AI Coding	Super AI Coding (H.265); Super AI Coding (H.264) *Includes smart codec technology, Smart H.265+ and Smart H.264+
Video Frame Rate	Main stream: 2560 × 1440@(1–25/30 fps) Sub stream: 704 × 576@(1–25 fps)/704 × 480@(1–30 fps) *The values above are the max frame rates of each stream; for multiple streams, the values will be subjected to the total encoding capacity.
Streaming Capability	2 streams
Resolution	4M (2560 × 1440); 3M (2304 × 1296); 1080p (1920 × 1080); 1.3M (1280 × 960); 720p (1280 × 720); D1 (704 × 576/704 × 480); VGA (640 × 480); CIF (352 × 288/352 × 240)
Bit Rate Control	VBR;CBR
Video Bit Rate	H.264: 9 kbps–4096 kbps; H.265: 9 kbps–4096 kbps
Day/Night	Auto(ICR)/Color/B/W
BLC	Yes
HLC	Yes
WDR	120 dB
White Balance	Auto; Natural; Street Lamp; Outdoor; Manual; Regional Custom
Gain Control	Manual;Auto
Noise Reduction	3D NR
Motion Detection	OFF/ON (4 areas, rectangular)
Region of Interest (RoI)	Yes (4 areas)
Smart Illumination	Yes
Smart Dual Light	Yes
Image Rotation	0°/180°
Mirror	Yes
Privacy Masking	4 areas

Audio

Built-in MIC	Yes, built-in Mic
Audio Compression	PCM; G.711a; G.711Mu; G.726

Alarm

Alarm Event	Network disconnection; IP conflict; illegal access; motion detection; video tampering; audio detection; SMD; security exception

Network

Network Port	RJ-45 (10 Base-Te/100 Base-T)
SDK and API	Yes
Network Protocol	IPv4; IPv6; HTTP; TCP; ARP; RTP; RTSP; RTCP; RTMP; SMTP; FTP; DHCP; DNS; DDNS; NTP; ICMP; IGMP; NFS; P2P; Auto Registration
Interoperability	ONVIF (Profile S & Profile T); CGI

User/Host	6 (Total bandwidth: 24 M)
Storage	FTP
Browser	Chrome; Firefox
Management Software	Smart PSS Lite; DSS; DMSS; DoLynk Care
Mobile Client	iOS;Android
Security	Digest;WSSE;Account lockout;Security logs;IP/MAC filtering;Generation and importing of X.509 certification;syslog;HTTPS;Trusted boot;Trusted execution;Trusted upgrade;Session security;Security warning;SSL/TLS1.2;AES 256

Certification

Certifications	CE-LVD: EN62368-1; CE-EMC: Electromagnetic Compatibility Directive 2014/30/EU

Power

Power Supply	12 VDC (±30%); PoE (802.3af)
Dual Power Backup	When the power adapter and PoE provide power at the same time, disconnect one of them. The device will continue to work, but will not restart.
Power Consumption	Basic: 1.6 W (12 VDC); 2.3 W (PoE); Max.: 5.7 W (12 VDC); 7.0 W (PoE) (H.265 + illuminator intensity)

Environment

Operating Temperature	–40 °C to +60 °C (–40 °F to +140 °F)
Operating Humidity	≤95% (RH), non-condensing
Storage Temperature	–40 °C to +60 °C (–40 °F to +140 °F)
Storage Humidity	≤95% (RH), non-condensing
Protection	IP67
Anti-corrosion Level	Basic Protection *The products are designed for general use and are applicable even in areas with no specific requirements for anti-corrosion protection.

Structure

Casing Material	Metal + Plastic
Product Dimensions	197.9 mm × 80.2 mm × 76.2 mm (7.79" × 3.16" × 3.00") (L × W × H)
Net Weight	0.31 kg (0.68 lb)
Gross Weight	0.45 kg (0.99 lb)

Ordering Information

Type	Model	Description
IP CAMERA	DH-IPC-HFW1439TL1-A-IL	4 MP Entry Smart Dual Light Fixed-focal Bullet Network Camera
Accessories (Optional)	DH-PFA151	Corner Mount Bracket
	G3416GW	G3/4" Water Joint
	DH-PFA130-E	Water-proof Junction Box
	DH-PFA157	Pole Mount Bracket
Accessories (Optional)	DH-PFA134	Junction Box
	DH-PFM320-010EN	DC12V 1A Power Adapter
	DH-PFM325D-1210EN	DC12V 1A Power Adapter
	DH-PFM325D-1215EN	DC12V 1.5A Power Adapter
	DH-PFM320-020EN	DC12V 2A Power Adapter
	DH-PFM320D-EN	DC12V 2A Power Adapter
	PFM900-E	Integrated Mount Tester

Accessories

Optional:

DH-PFA151
Corner Mount Bracket

G3416GW
G3/4" Water Joint

DH-PFA130-E
Water-proof Junction Box

DH-PFA157
Pole Mount Bracket

DH-PFA134
Junction Box

DH-PFM320-010EN
DC12V 1A Power Adapter

DH-PFM325D-1210EN
DC12V 1A Power Adapter

DH-PFM325D-1215EN
DC12V 1.5A Power Adapter

DH-PFM320-020EN
DC12V 2A Power Adapter

DH-PFM320D-EN
DC12V 2A Power Adapter

PFM900-E
Integrated Mount Tester

Ceiling Mount	Wall Mount	Pole Mount(Vertical)
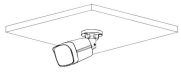	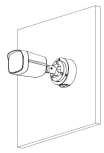	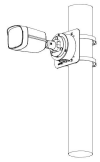

Dimensions (mm[inch])

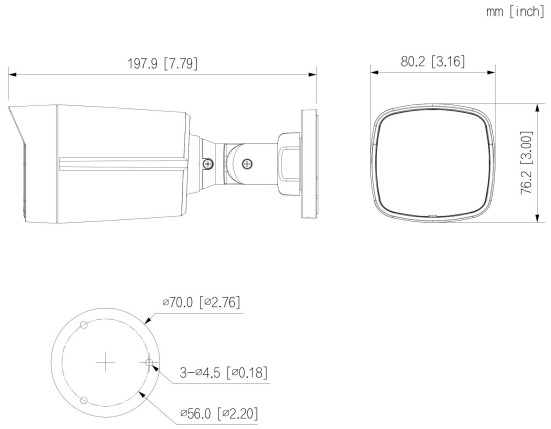

©2026 Dahua. All rights reserved. Design and specifications are subject to change without notice.
Pictures in the document are for reference only, and the actual product shall prevail.